WEAVING MACHINERY
tel: 01386 49155

CM 71A

Hydraulic Crane - Quick Assembling

Schematics

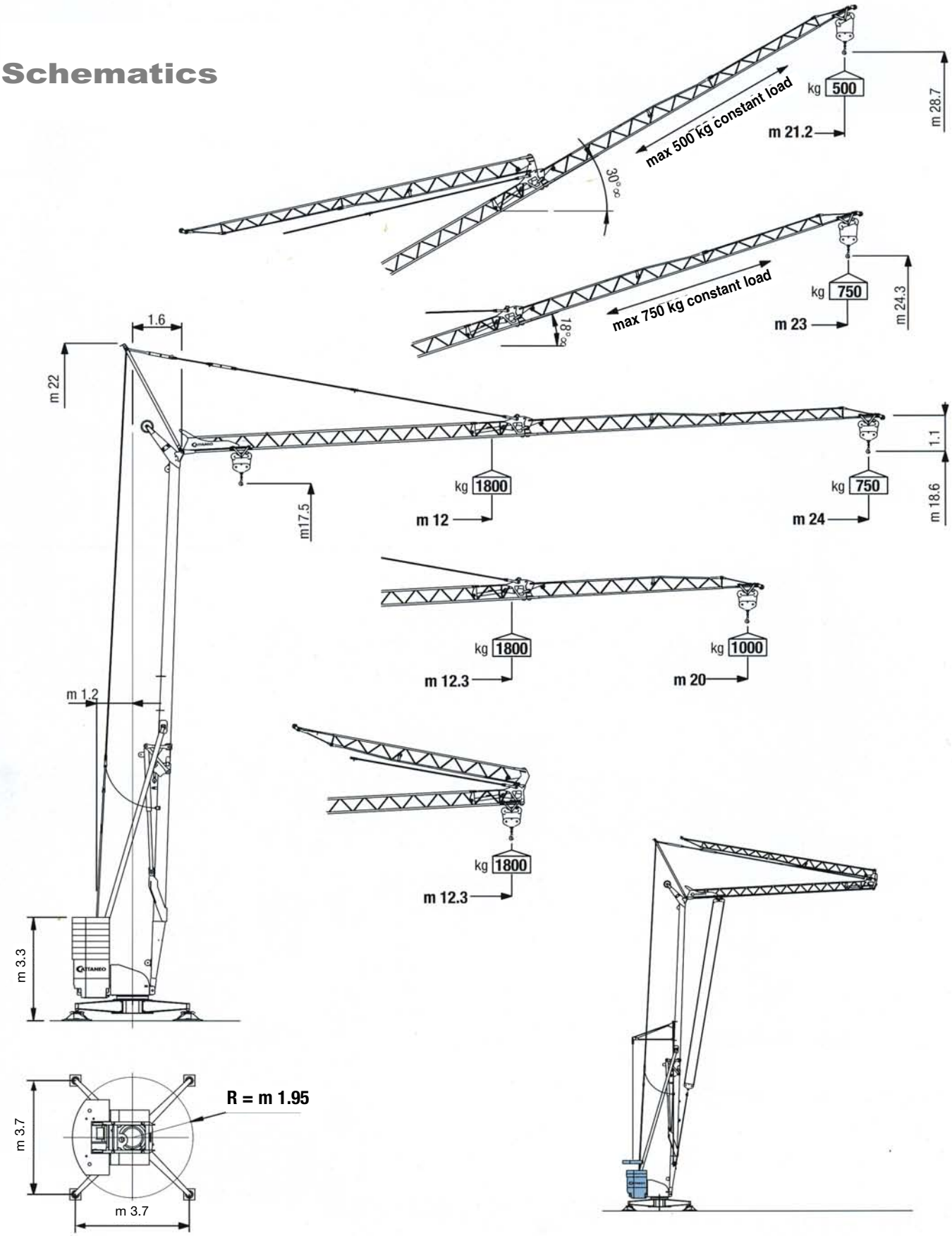

LOAD DIAGRAMS

kg	1800	1600	1400	1200	1000	900	750
m	12.0	12.9	14.4	16.3	18.9	20.6	**24**
m	12.3	13.5	15.1	17.2	**20**		

CE LWA 96 dB